NEWHAVEN DISPLAY
INTERNATIONAL

Product Specification

NHD-2.4-240320AF-CSXP

TFT Liquid Crystal Display

NHD-	Newhaven Display
2.4-	2.4" Diagonal
240320-	240xRGBx320 Pixels
AF-	Model
C-	Built-in Controller
S-	High Brightness, White LED Backlight
X-	TFT
P-	IPS, Wide Temperature

Newhaven Display International, Inc.
2661 Galvin Court, Elgin, IL 60124 USA

Ph: 847.844.8795 | Fx: 847.844.8796
www.newhavendisplay.com

REACH Compliant

RoHS Compliant

Table of Contents

Document Revision History 2
Mechanical Drawing 3
Pin Description 4
Interface Selection 4
Wiring Diagram 5
Electrical Characteristics 6
Optical Characteristics 6
Controller Information 6
Timing Characteristics for TFT 7
Example Initialization Code 10
Quality Information 12

Additional Resources

- **Support Forum:** https://support.newhavendisplay.com/hc/en-us/community/topics
- **GitHub:** https://github.com/newhavendisplay
- **Example Code:** https://support.newhavendisplay.com/hc/en-us/categories/4409527834135-Example-Code/
- **Knowledge Center:** https://www.newhavendisplay.com/knowledge_center.html
- **Quality Center:** https://www.newhavendisplay.com/quality_center.html
- **Precautions for using LCDs/LCMs:** https://www.newhavendisplay.com/specs/precautions.pdf
- **Warranty / Terms & Conditions:** https://www.newhavendisplay.com/terms.html

Document Revision History

Revision	Date	Description	Changed By
-	03/20/2024	Initial Release	KL

Mechanical Drawing

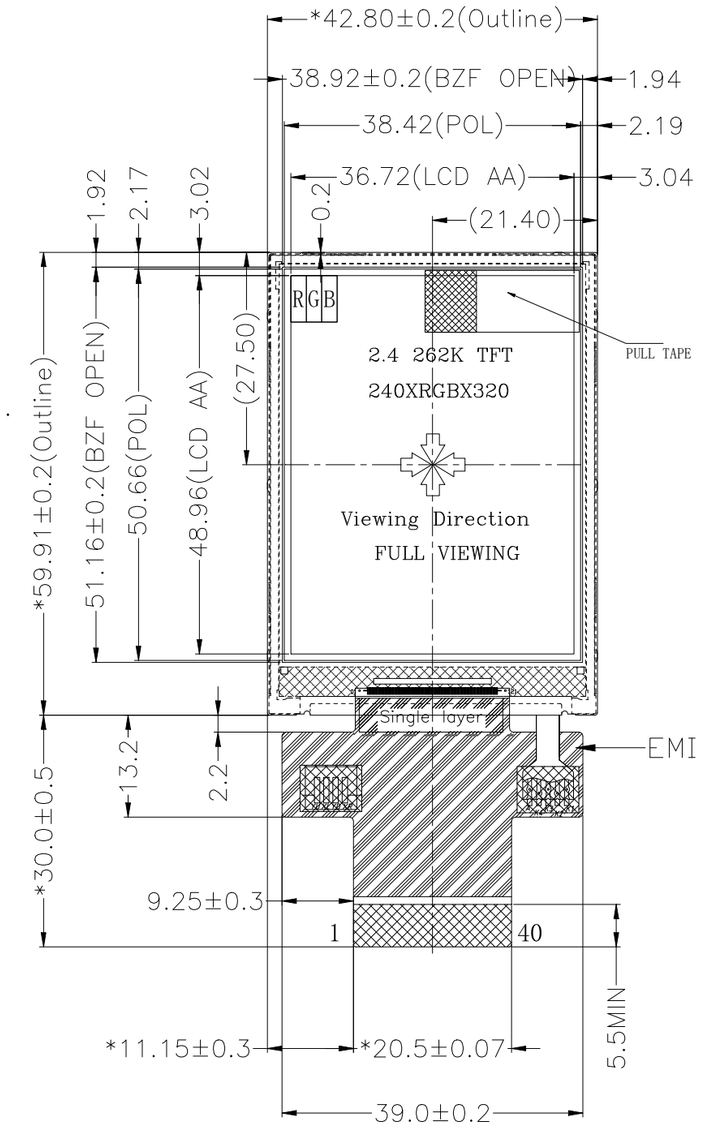

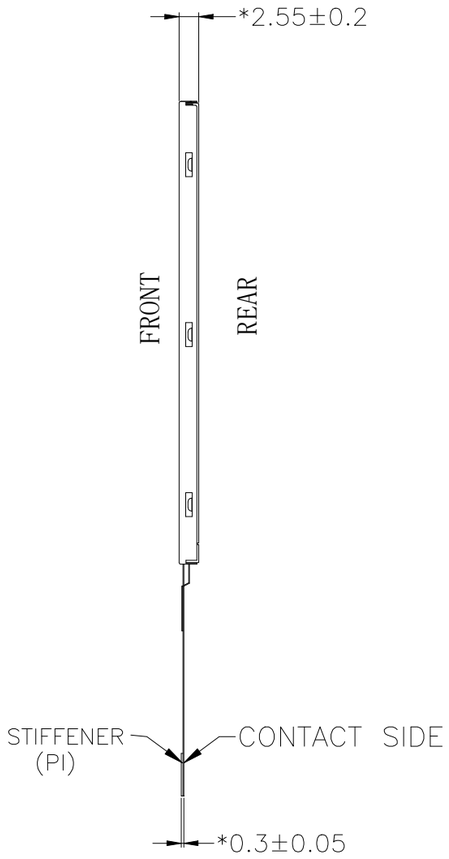

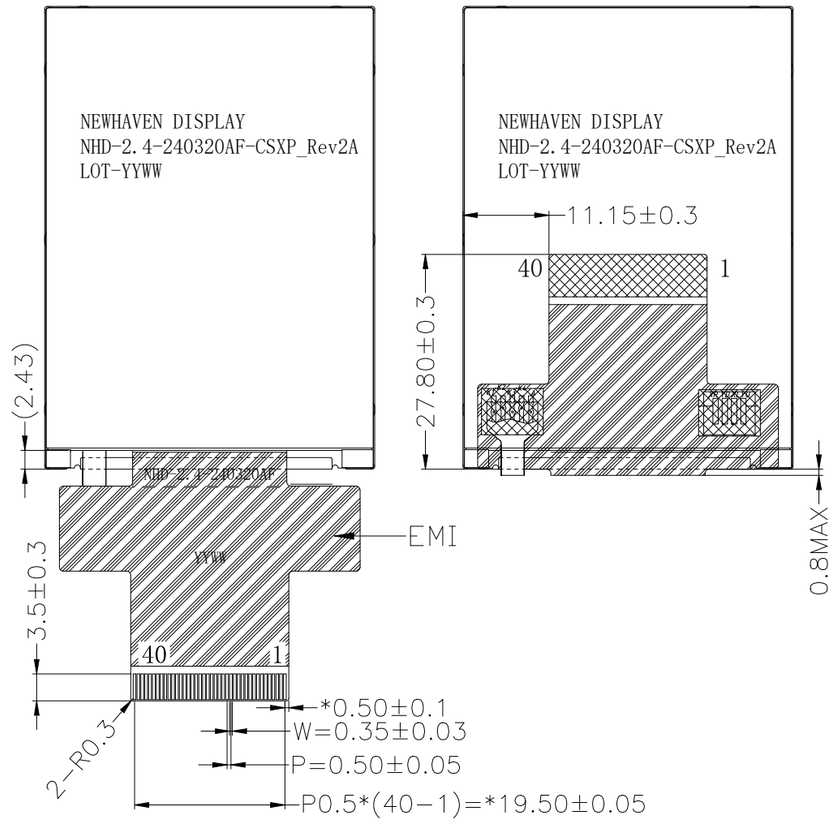

Pin No.	Symbol
1	GND
2	NC
3	NC
4	NC
5	NC
6	SDO
7	VDD
8	VDDI
9	SDA
10	CSX
11	DCX
12	WRX
13	RDX
14	DB0
15	DB1
16	DB2
17	DB3
18	DB4
19	DB5
20	DB6
21	DB7
22	DB8
23	DB9
24	DB10
25	DB11
26	DB12
27	DB13
28	DB14
29	DB15
30	RESX
31	IM0
32	IM2
33	GND
34	LED-K1
35	LED-K2
36	LED-K3
37	LED-K4
38	LED-A
39	GND
40	TE

Product Description: 2.4" 240x320 IPS TFT

1. Driver IC: ST7789VI
2. Interface: 8/16-bit 8080 Parallel, 3-wire SPI
3. Power Requirement: 3.3V TFT, 3.0V/160mA Backlight
4. Optical Features: Normally Black, Transmissive, Anti-Glare, 1200cd/m²
5. Recommended FFC Connector: 40pin 0.5mm pitch; Ex. Molex 54132-4062
6. EMI Shielded FPC

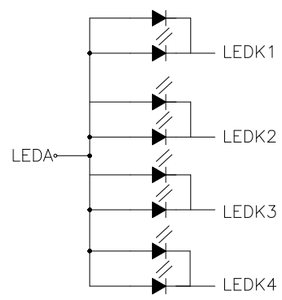

LED CIRCUIT

Standard Tolerance:
(Unless otherwise specified)
Linear: ±0.3mm

NEWHAVEN DISPLAY INTERNATIONAL

Drawing/Part Number: NHD-2.4-240320AF-CSXP
Revision: 2A

Unless otherwise specified:
• Dimensions are in Millimeters
• Third Angle Projection

Drawn By: K. Lewis
Drawn Date: 12/15/2023
Approved By: K. Lewis
Approved Date: 12/15/2023

This drawing is solely the property of Newhaven Display International, Inc. The information it contains is not to be disclosed, reproduced or copied in whole or part without written approval from Newhaven Display.

Pin Description

Pin No.	Symbol	External Connection	Function Description
1	GND	Power Supply	Ground
2	NC	-	No Connect
3	NC	-	No Connect
4	NC	-	No Connect
5	NC	-	No Connect
6	SDO	MPU	Serial Data Out
7	VDD	Power Supply	Supply Voltage for LCD (3.3V)
8	VDDI	Power Supply	Supply Voltage for Logic
9	SDA	MPU	Serial Data In
10	CSX	MPU	Active LOW Chip Select signal
11	DCX	MPU	Data / Command selection: '1' = Data; '0' = Command
12	WRX	MPU	Active LOW Write signal
13	RDX	MPU	Active LOW Read signal
14	DB0	MPU	Bi-directional data bus 8-bit: use DB8-DB15 16-bit: use DB0-DB15
15	DB1	MPU	
16	DB2	MPU	
17	DB3	MPU	
18	DB4	MPU	
19	DB5	MPU	
20	DB6	MPU	
21	DB7	MPU	
22	DB8	MPU	
23	DB9	MPU	
24	DB10	MPU	
25	DB11	MPU	
26	DB12	MPU	
27	DB13	MPU	
28	DB14	MPU	
29	DB15	MPU	
30	RESX	MPU	Active LOW Reset signal
31	IM0	MPU	Interface Mode Select
32	IM2	MPU	Interface Mode Select
33	GND	Power Supply	Ground
34	LED-K1	Power Supply	Backlight Cathode (Ground)
35	LED-K2	Power Supply	
36	LED-K3	Power Supply	
37	LED-K4	Power Supply	
38	LED-A	Power Supply	Backlight Anode (3.0V/160mA)
39	GND	Power Supply	Ground
40	TE	MPU	Tearing Effect Output

Recommended LCD connector: 40-pin, 0.5mm pitch FFC connector **Molex P/N**: 54132-4062 or similar

Interface Selection

Pin Name	8-bit 8080-II Parallel	16-bit 8080-II Parallel	3-wire SPI
IM0	1	0	1
IM2	0	0	1

Wiring Diagram

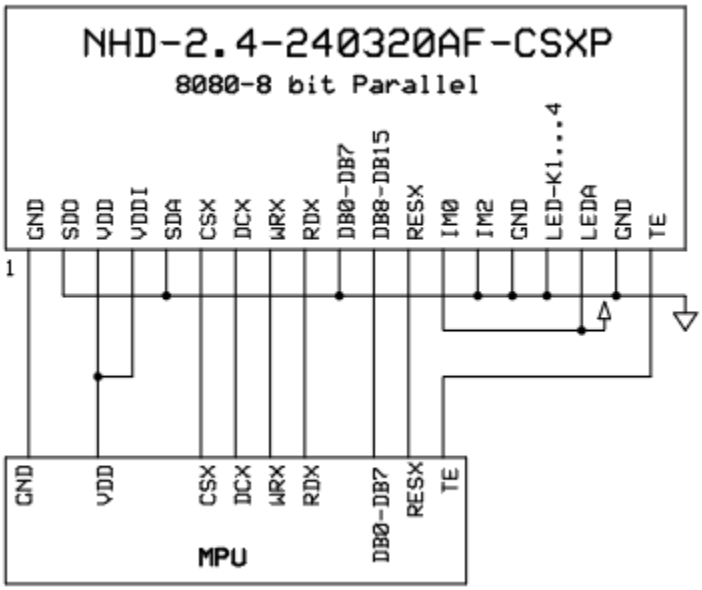

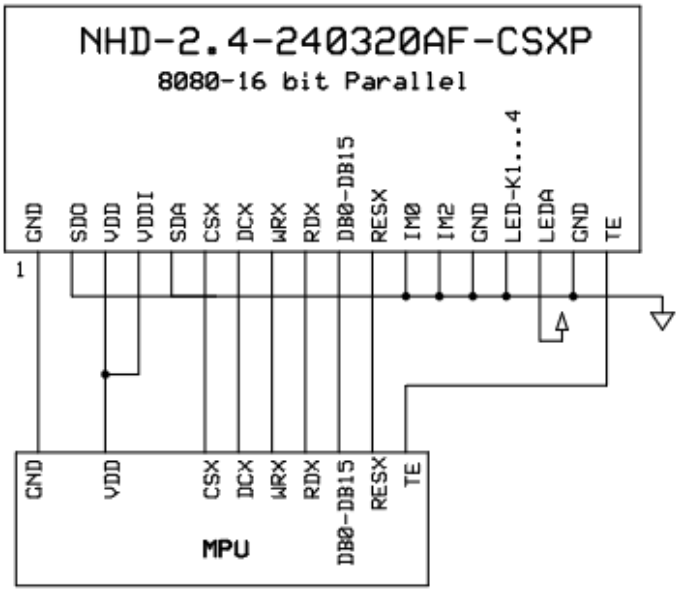

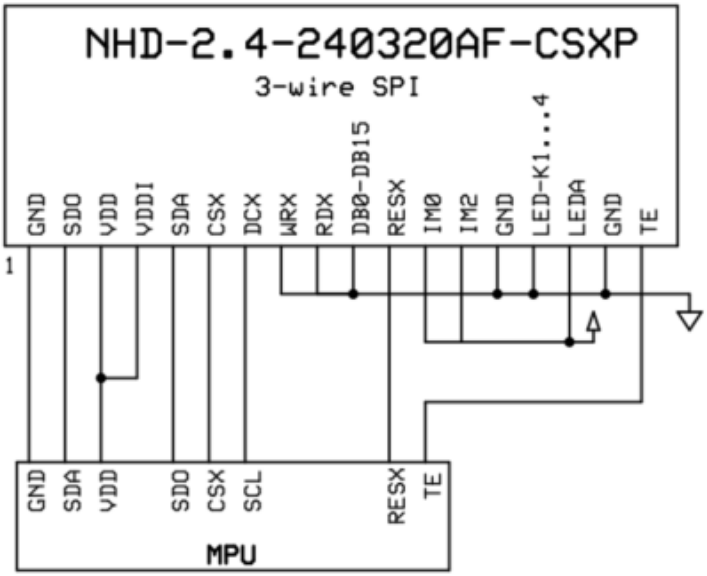

Electrical Characteristics

Item	Symbol	Condition	Min.	Typ.	Max.	Unit
Operating Temperature Range	T_{OP}	Absolute Max	-20	-	+70	°C
Storage Temperature Range	T_{ST}	Absolute Max	-30	-	+80	°C
Supply Voltage for LCD	V_{DD}	-	2.4	3.3	3.6	V
Supply Voltage for Logic	V_{DDI}	-	1.65	1.8	3.6	V
Supply Current	I_{DD}	V_{DD} = 3.3V	5	10	15	mA
"H" Level input	V_{IH}	-	0.7 * V_{DDI}	-	V_{DDI}	V
"L" Level input	V_{IL}	-	GND	-	0.3 * V_{DDI}	V
"H" Level output	V_{OH}	-	0.8 * V_{DDI}	-	V_{DDI}	V
"L" Level output	V_{OL}	-	GND	-	0.2 * V_{DDI}	V
Backlight Supply Current	I_{LED}	-	80	160	200	mA
Backlight Supply Voltage	V_{LED}	I_{LED} = 160mA	2.7	3.0	3.4	V
Backlight Lifetime*	-	I_{LED} = 160mA T_{OP} = 25°C	30,000	50,000	-	Hrs.

*Backlight Lifetime is rated as Hours until **half-brightness**, under normal operating conditions. The LED of the backlight is driven by current drain; drive voltage is for reference only. Drive voltage must be selected to ensure backlight current drain is below MAX level stated.

Optical Characteristics

Item		Symbol	Condition	Min.	Typ.	Max.	Unit
Optimal Viewing Angles	Top	φY+	CR ≥ 10	-	80	-	°
	Bottom	φY-		-	80	-	°
	Left	θX-		-	80	-	°
	Right	θX+		-	80	-	°
Contrast Ratio		CR	-	1000	1500	-	-
Luminance		L_V	I_{LED} = 160mA	1000	1200	-	cd/m²
Response Time		$T_R + T_F$	T_{OP} = 25°C	-	35	45	ms
Chromaticity	Red	X_R	-	0.585	0.635	0.685	-
		Y_R	-	0.291	0.341	0.391	-
	Green	X_G	-	0.276	0.326	0.376	-
		Y_G	-	0.569	0.619	0.669	-
	Blue	X_B	-	0.105	0.155	0.205	-
		Y_B	-	0.026	0.076	0.126	-
	White	X_W	-	0.283	0.313	0.343	-
		Y_W	-	0.299	0.329	0.359	-

Controller Information

Built-in ST7789VI Controller: https://support.newhavendisplay.com/hc/en-us/articles/10814990300823-ST7789VI

Timing Characteristics for TFT

Parallel 8/16-bit Interface Timing Characteristics

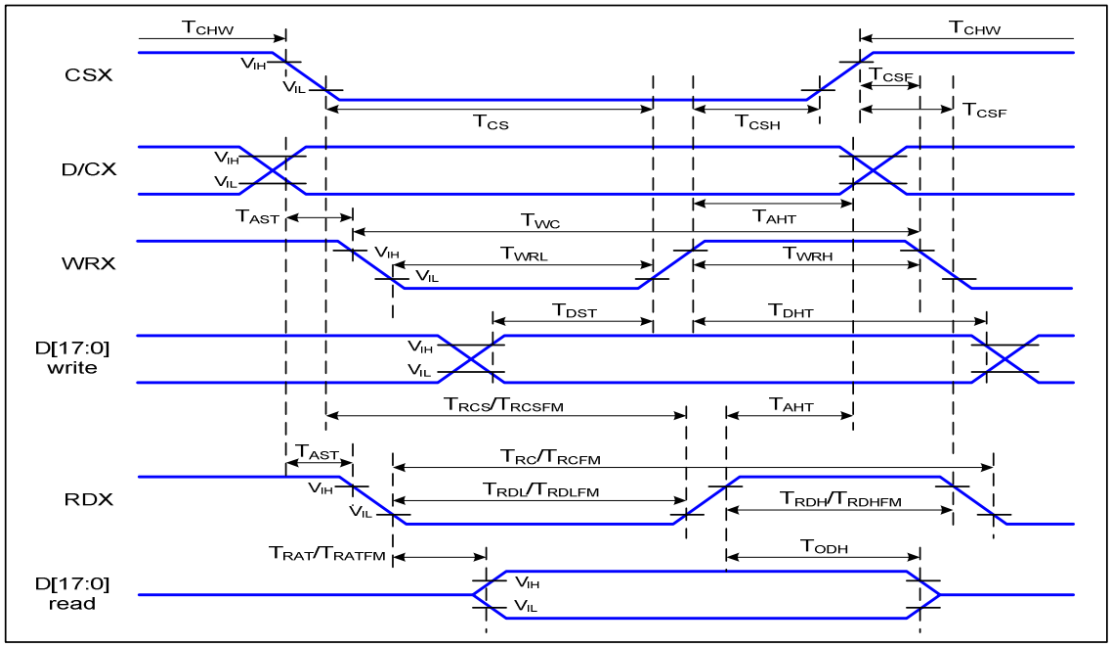

Signal	Symbol	Parameter	Min	Max	Unit	Description
D/CX	T_{AST}	Address setup time	0		ns	-
	T_{AHT}	Address hold time (Write/Read)	10		ns	
CSX	T_{CHW}	Chip select "H" pulse width	0		ns	-
	T_{CS}	Chip select setup time (Write)	15		ns	
	T_{RCS}	Chip select setup time (Read ID)	45		ns	
	T_{RCSFM}	Chip select setup time (Read FM)	355		ns	
	T_{CSF}	Chip select wait time (Write/Read)	10		ns	
	T_{CSH}	Chip select hold time	10		ns	
WRX	T_{WC}	Write cycle	66		ns	
	T_{WRH}	Control pulse "H" duration	15		ns	
	T_{WRL}	Control pulse "L" duration	15		ns	
RDX (ID)	T_{RC}	Read cycle (ID)	160		ns	When read ID data
	T_{RDH}	Control pulse "H" duration (ID)	90		ns	
	T_{RDL}	Control pulse "L" duration (ID)	45		ns	
RDX (FM)	T_{RCFM}	Read cycle (FM)	450		ns	When read from frame memory
	T_{RDHFM}	Control pulse "H" duration (FM)	90		ns	
	T_{RDLFM}	Control pulse "L" duration (FM)	355		ns	
D[17:0]	T_{DST}	Data setup time	10		ns	For CL=30pF
	T_{DHT}	Data hold time	10		ns	
	T_{RAT}	Read access time (ID)		40	ns	
	T_{RATFM}	Read access time (FM)		340	ns	
	T_{ODH}	Output disable time	20	80	ns	

3-wire Serial interface Timing Characteristics

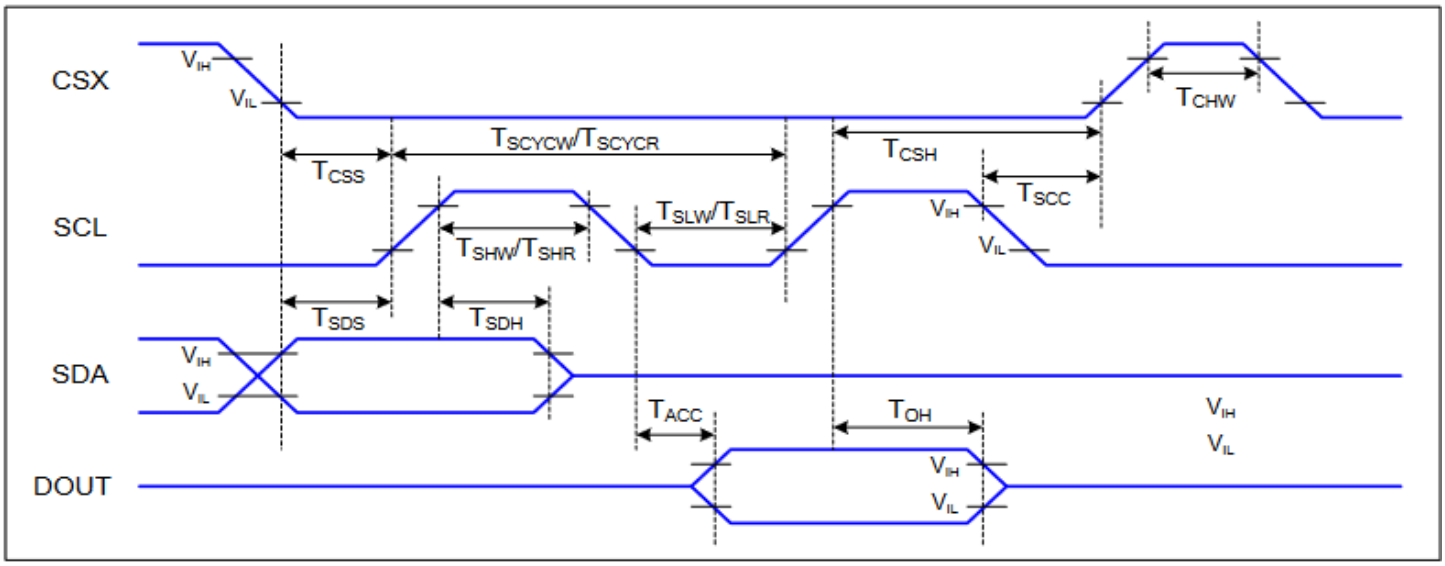

Signal	Symbol	Parameter	Min	Max	Unit	Description
CSX	T_{CSS}	Chip select setup time (write)	15		ns	
	T_{CSH}	Chip select hold time (write)	15		ns	
	T_{CSS}	Chip select setup time (read)	60		ns	
	T_{SCC}	Chip select hold time (read)	65		ns	
	T_{CHW}	Chip select "H" pulse width	40		ns	
SCL	T_{SCYCW}	Serial clock cycle (Write)	16		ns	
	T_{SHW}	SCL "H" pulse width (Write)	7		ns	
	T_{SLW}	SCL "L" pulse width (Write)	7		ns	
	T_{SCYCR}	Serial clock cycle (Read)	150		ns	
	T_{SHR}	SCL "H" pulse width (Read)	60		ns	
	T_{SLR}	SCL "L" pulse width (Read)	60		ns	
SDA (DIN)	T_{SDS}	Data setup time	7		ns	
	T_{SDH}	Data hold time	7		ns	
DOUT	T_{ACC}	Access time	10	50	ns	For maximum CL=30pF
	T_{OH}	Output disable time	15	50	ns	For minimum CL=8pF

Reset Timing

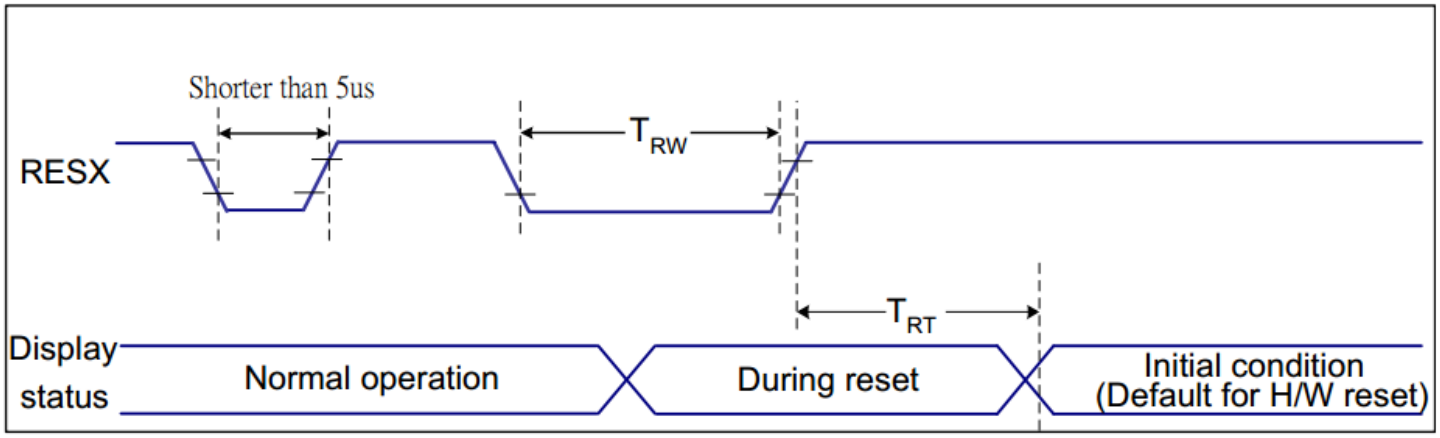

Related Pins	Symbol	Parameter	MIN	MAX	Unit
RESX	TRW	Reset pulse duration	10	-	us
	TRT	Reset cancel	-	5 (Note 1, 5)	ms
				120 (Note 1, 6, 7)	ms

Power ON/OFF Sequence

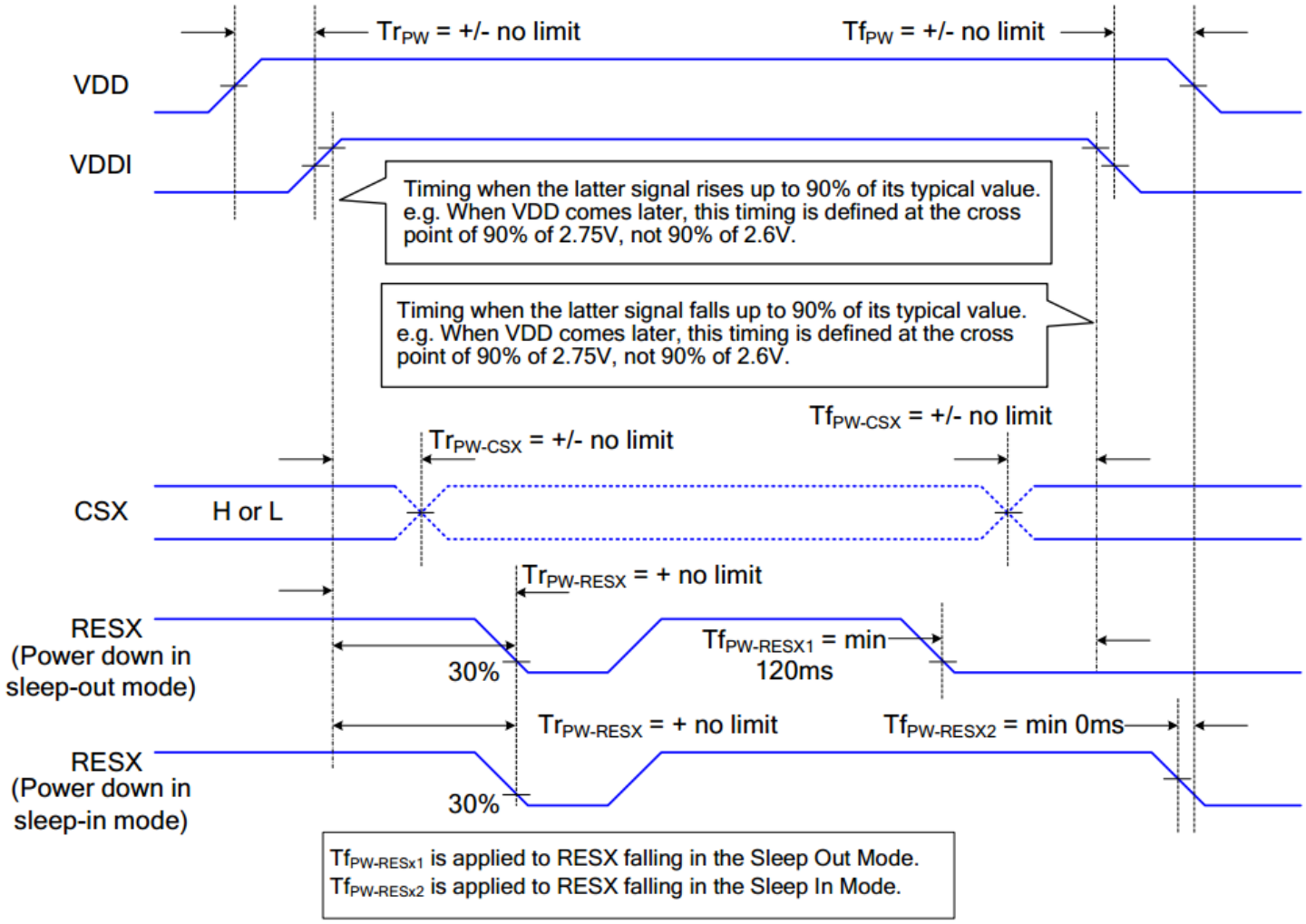

Example Initialization Code

```
/*****************************************************************************/
void Command_out(unsigned char c)  //Function used for sending commands to TFT
{
  PORTA &= ~(1 << PORTA3);   // Set DCX pin to LOW
  PORTL=c;                   // Assigning the Command Byte 'c' to PortL
  PORTA &= ~(1 << PORTA7);   // Set WRX pin to LOW
  PORTA |=  (1 << PORTA7);   // Set WRX pin to HIGH
 }

/*****************************************************************************/
void data_out(unsigned char d) //Function used for sending data to TFT
{

  PORTA |=  (1 << PORTA3);   // Set DCX pin to HIGH
  PORTL=d;                   // Assigning the Data Byte 'd' to PortL
  PORTA &= ~(1 << PORTA7);   // Set WRX pin to LOW
  PORTA |=  (1 << PORTA7);   // Set WRX pin to HIGH
}

/*****************************************************************************/
void TFT_init(){

  digitalWrite(RESX, LOW);
  delay(250);
  digitalWrite(RESX, HIGH);
  delay(250);

  Command_out(0x28);  //display off
  Command_out(0x11);  //exit SLEEP mode
  delay(100);

  Command_out(0x36);  //MADCTL: memory data access control
  data_out(0x88);

  Command_out(0x3A);  //COLMOD: Interface Pixel format  *** 65K-colors in 16bit/pixel (5-
6-5) format when using 16-bit interface to allow 1-byte per pixel
  data_out(0x55);

  Command_out(0xB2);  //PORCTRK: Porch setting
  data_out(0x0C);
  data_out(0x0C);
  data_out(0x00);
  data_out(0x33);
  data_out(0x33);

  Command_out(0xB7);  //GCTRL: Gate Control
  data_out(0x35);

  Command_out(0xBB);  //VCOMS: VCOM setting
  data_out(0x2B);

  Command_out(0xC0);  //LCMCTRL: LCM Control
  data_out(0x2C);

  Command_out(0xC2);  //VDVVRHEN: VDV and VRH Command Enable
  data_out(0x01);
  data_out(0xFF);
```

```
  Command_out(0xC3);  //VRHS: VRH Set
  data_out(0x11);

  Command_out(0xC4);  //VDVS: VDV Set
  data_out(0x20);

  Command_out(0xC6);  //FRCTRL2: Frame Rate control in normal mode
  data_out(0x0F);

  Command_out(0xD0);  //PWCTRL1: Power Control 1
  data_out(0xA4);
  data_out(0xA1);

  Command_out(0xE0);  //PVGAMCTRL: Positive Voltage Gamma control
  data_out(0xD0);
  data_out(0x00);
  data_out(0x05);
  data_out(0x0E);
  data_out(0x15);
  data_out(0x0D);
  data_out(0x37);
  data_out(0x43);
  data_out(0x47);
  data_out(0x09);
  data_out(0x15);
  data_out(0x12);
  data_out(0x16);
  data_out(0x19);

  Command_out(0xE1);  //NVGAMCTRL: Negative Voltage Gamma control
  data_out(0xD0);
  data_out(0x00);
  data_out(0x05);
  data_out(0x0D);
  data_out(0x0C);
  data_out(0x06);
  data_out(0x2D);
  data_out(0x44);
  data_out(0x40);
  data_out(0x0E);
  data_out(0x1C);
  data_out(0x18);
  data_out(0x16);
  data_out(0x19);

  Command_out(0x2A);  //X address set
  data_out(0x00);
  data_out(0x00);
  data_out(0x00);
  data_out(0xEF);

  Command_out(0x2B);  //Y address set
  data_out(0x00);
  data_out(0x00);
  data_out(0x01);
  data_out(0x3F);
  delay(10);
  Command_out(0x21);  //Color inversion for IPS
  Command_out(0x29);  //display ON
  delay(10);
}
```

Quality Information

Test Item	Content of Test	Test Condition	Note
High Temperature Storage	Endurance test applying the high storage temperature for a long time.	+80°C, 240hrs	2
Low Temperature Storage	Endurance test applying the low storage temperature for a long time.	-30°C, 240hrs	1,2
High Temperature Operation	Endurance test applying the electric stress (voltage & current) and the high thermal stress for a long time.	+70°C, 240hrs	2
Low Temperature Operation	Endurance test applying the electric stress (voltage & current) and the low thermal stress for a long time.	-20°C, 240hrs	1,2
High Temperature / Humidity Operation	Endurance test applying the electric stress (voltage & current) and the high thermal with high humidity stress for a long time.	+60°C, 90% RH, 240hrs	1,2
Thermal Shock resistance	Endurance test applying the electric stress (voltage & current) during a cycle of low and high thermal stress.	-30°C 30min -> 25°C 3min -> 80°C 30min = 1 cycle. For 100 cycles	
Vibration test	Endurance test applying vibration to simulate transportation and use.	10Hz-55Hz (1 min.), 1.5mm amplitude. 30 min. exposure for each directions X,Y,Z	3
Static electricity test	Endurance test applying electric static discharge.	Air charge: ±8kV 10 Times Contact charge: ±4kV 10 Times	

Note 1: No condensation to be observed.
Note 2: Conducted after 4 hours of storage at 25°C, 0%RH.
Note 3: Test performed on product itself, not inside a container.